Reference Manual

Ionizer Module

for XPR Analytical Balances

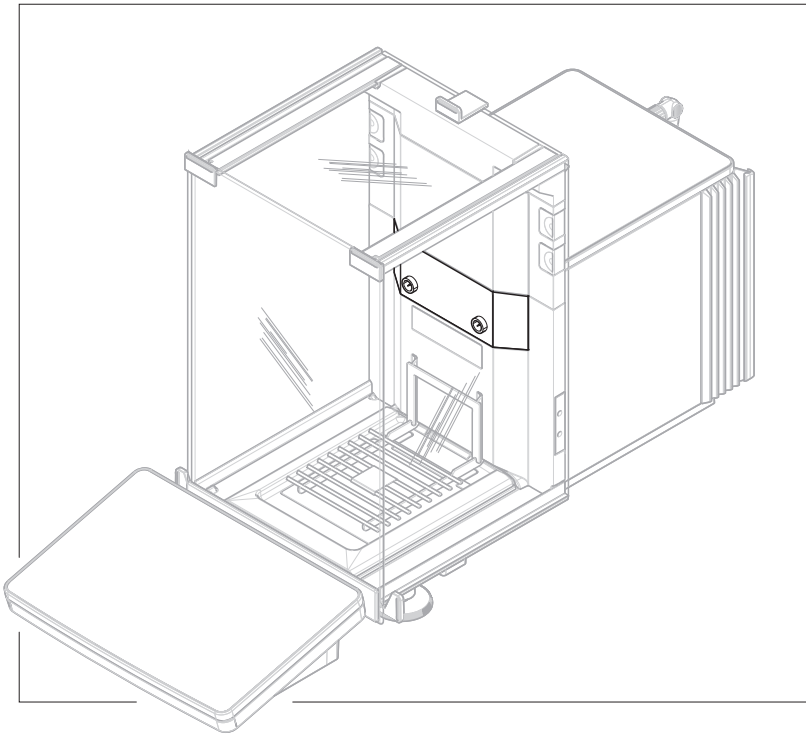

METTLER TOLEDO

Meech International

2 Network Point
Range Road, Witney
OX29 0YN, UK

Tel: +44 (0) 1993 706700
Fax: +44 (0) 1993 776977

email: sales@meech.com
web: www.meech.com

Declaration of Conformity

Equipment

Model: BMT-DAVINCI-01

Ionizer Module
for XPR Analytical Balances

Applicable Harmonised standards

EMCD. EN 61000-6-4:2007+A1:2011
EN61000-6-2:2005

EU Council Directives

Electromagnetic Compatibility Directive
2014/30/EU (Technical File)

On behalf of the above named company, I declare that, on the date the equipment accompanied by this declaration is placed on the market, the equipment conforms with all technical and regulatory requirements of the above listed directives.

J. Ferguson

Jon Ferguson, Engineering Manager.

Date of issue: 27/07/2018

Meech Static Eliminators Ltd
Registered in England No 1525004 VAT No. GB236 1258 65

Offices in:
• UK • USA • Belgium • Hungary • China

1 Introduction

Your Ionizer Module is an accessory for METTLER TOLEDO analytical balances. The ionizer produces a corona of ionized air, providing ions of the opposite polarity to neutralize static charges in the object being weighed.

The guidelines stated in the Reference Manual of the METTLER TOLEDO balance connected to your ionizer also fully apply to your Ionizer Module.

Conventions and symbols

Refers to an external document.

Key and/or button designations and display texts are shown in graphic or bold text, e.g., ✎, **Edit**.

Elements of instructions

- Prerequisites

1 Steps

2 …

  ⇨ Intermediate results

⇨ Results

2 Safety Information

2.1 Definition of signal warnings and symbols

Safety notes contain important information on safety issues. Ignoring the safety notes may lead to personal injury, damage to the instrument, malfunctions and false results. Safety notes are marked with the following signal words and warning symbols:

Signal words

CAUTION	A hazardous situation with low risk, resulting in minor or moderate injury if not avoided.
NOTICE	A hazardous situation with low risk, resulting in damage to the instrument, other material damage, malfunctions and erroneous results, or loss of data.

Warning symbols

General hazard: read the User Manual or the Reference Manual for information about the hazards and the resulting measures.

Electrical shock

Notice

2.2 Product-specific safety notes

Intended use

Your ionizer is an accessory for METTLER TOLEDO analytical balances and is used to discharge electrostatically charged objects. Use the ionizer exclusively for this purpose. Any other type of use and operation beyond the limits of technical specifications without written consent from Mettler-Toledo GmbH, is considered as not intended.

Intended use also includes compliance with all the instruction in this Reference Manual and the Reference Manual of your balance.

Responsibilities of the instrument owner

The instrument owner is the person holding the legal title to the instrument and who uses the instrument or authorizes any person to use it, or the person who is deemed by law to be the operator of the instrument. The instrument owner is responsible for the safety of all users of the instrument and third parties.

METTLER TOLEDO assumes that the instrument owner trains users to safely use the instrument in their workplace and deal with potential hazards. METTLER TOLEDO assumes that the instrument owner provides the necessary protective gear.

⚠ CAUTION

Injury due to spiky emitters

– Do not touch the emitter pins directly.

NOTICE

Reduced performance due to inert gas

An inert gas atmosphere or an inert gas purging system influences the transfer of ions and will result in reduced ionization efficacy.

– Only use the Ionizer Module in air.

3 Installation and Putting into Operation

Note

Mettler-Toledo GmbH recommends that the Ionizer Module be installed by a METTLER TOLEDO service representative.

3.1 Scope of delivery

- Ionizer Module
- Wedge-shaped tool
- Reference Manual

Check the package, the packaging elements and the delivered components for damages. If any components are damaged, please contact your METTLER TOLEDO service representative.

3.2 Installing the Ionizer Module

NOTICE

Damage to the instrument due to the use of unsuitable tools

Using a screwdriver or the like to remove the module-compartment cover can damage the instrument.

– Use the wedge-shaped tool provided with the Ionizer Module to remove the module-compartment cover.

For full information, always consult and download the Reference Manual (RM).

▶ www.mt.com/XPR-analytical-RM

- Balance is disconnected from the power supply.
- Front panel draft shield is removed, **see** Reference Manual of the balance.
- Side and top panel draft shields are opened, **see** Reference Manual of the balance

1 Insert the wedge-shaped tool (1) provided with the Ionizer Module on either side of the module-compartment cover (2) and flip to lift the cover off.

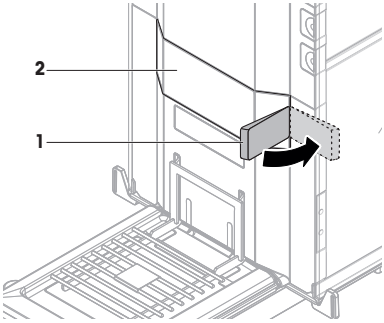

2 Remove the module-compartment cover (2).

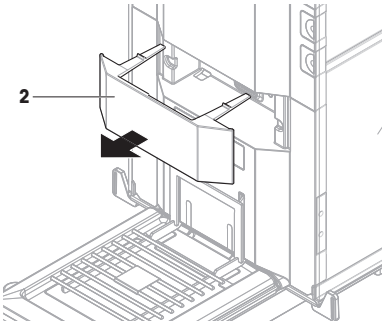

3 Insert the Ionizer Module (3).
4 Put back the top, side, and front draft shield.
5 Reconnect the balance to the power supply.
6 Switch the balance on.
⇨ The Ionizer Module is installed and ready to use.

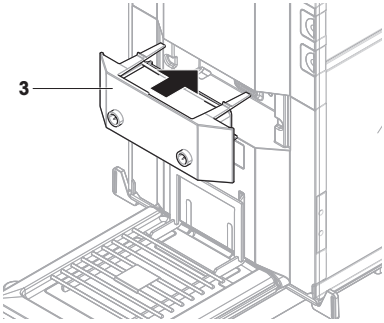

4 Operation

The ionizer is controlled by the balance. When used, it is activated for a duration of 5 seconds and it is deactivated afterwards.

For full information, always consult and download the Reference Manual (RM).

▶ www.mt.com/XPR-analytical-RM

4.1 Methods compatible with ionization

- **General Weighing**
- **Simple formulation**
- **Titration**

4.2 Using the Ionizer Module with StaticDetect

For information about creating or editing methods, **see** Reference Manual of the balance.

1 Generate a new compatible method or select a compatible method from the list of existing methods.
2 Tap **Edit**.
3 Tap **Weighing**.
4 In the section **Electrostatic**, set the **Ionizer** to **Active**.
5 Set the **Detection** to **Active**.
6 Set the **Threshold** to the desired value.
7 Tap **Save**.
8 Tap **Start method**.
9 Open the door and place the weighing container on the weighing pan.
10 Close the door.
   ⇨ When all doors are closed, static detection is performed, indicated by .
   ⇨ If the detected electric charges are lower than the defined **Threshold**, the icon is displayed. No ionization is necessary.
   ⇨ If the detected electric charges are higher than the defined **Threshold**, the Ionizer Module is discharging ions for a duration of 5 s, indicated by . When done, static detection is started again and the icon corresponding to the outcome is shown, either or .
   ⇨ If the detected electric charges are **still** higher than the defined **Threshold**, the ionization can be started manually (**see** [Triggering the Ionizer Module manually ▸ Page 7]).
11 Tap **→T←**.

⇨ The weighing is ready to be performed.

Note
The static detection / ionization sequence is performed every time the door is opened and closed.

Note
If the detected charges are above the defined **Threshold**, the weighing value can still be added to the protocol.

4.3 Triggering the Ionizer Module manually

- A method with **Ionizer Active** is running.

1 Tap **Discharge**.
   ⇨ The ionizer is discharging ions for a duration of 5 s, indicated by .
2 If **Detection** is set to **Active** for this method, the user can perform static detection by tapping **Detect**.
   ⇨ If the detected electric charges are lower than the defined **Threshold**, the icon is displayed.
   ⇨ If the detected electric charges are higher than the defined **Threshold**, the icon is displayed. The user can try to hold the object closer to the point electrodes and tap **Discharge** again.

⇨ The weighing is ready to be performed.

Note
The ionization is started every time the user taps **Discharge**.

Note
If an external ionizer is used simultaneously, both ionizers are started by tapping **Discharge**.

Note
If the detected charges are above the defined **Threshold**, the weighing value can still be added to the protocol.

5 Maintenance

5.1 Cleaning

⚠ WARNING

Electric shock

1 The balance must be disconnected from the power supply before maintenance.
2 Ensure that no liquid comes into contact with the AC adapter.
3 Never open the balance, terminal, ionizer or AC adapter – they contain no internal components that can be cleaned, repaired or replaced by the user.
4 Do not reconnect the balance until the cleaned parts are dry.

⚠ CAUTION

Injury due to spiky emitters

– Do not touch the emitter pins directly.

Clean the ionizer once a month with a soft brush or with ethyl alcohol and a lint-free cloth.

1 Clean the insulation, white PTFE, around the emitter pin and the emitter pin itself.
   Note Avoid touching this area with fingers to prevent contamination.
   ⇨ PTFE is white again.
2 Check that no ethyl alcohol is left on the ionizer.

Note
Please contact your METTLER TOLEDO service representative for details of the available service options.

5.2 Disposal

In conformance with the European Directive 2012/19/EU on Waste Electrical and Electronic Equipment (WEEE) this device may not be disposed of in domestic waste. This also applies to countries outside the EU, per their specific requirements.

Please dispose of this product in accordance with local regulations at the collecting point specified for electrical and electronic equipment. If you have any questions, please contact the responsible authority or the distributor from which you purchased this device. Should this device be passed on to other parties, the content of this regulation must also be related.

6 Troubleshooting

6.1 Error messages

Error message	Possible cause	Diagnostic	Remedy
Ionizer could not be found	Ionizer Module disconnected	–	Push the Ionizer Module in the module slot.
	Ionizer Module defective	–	Contact your METTLER TOLEDO service representative.

6.2 Error symptoms

Error symptom	Possible cause	Diagnostic	Remedy
Button **Discharge** does not appear on the display	Inappropriate method settings	Check the status of **Ionizer** in the method settings	Set **Ionizer** to **Active**

7 Technical Data

7.1 General data

Ionizer

Input voltage:	12 V DC +/- 10 %
Input corrent (operating):	175 mA
Weight:	260 g (complete with packaging)

Protection and standards

Overvoltage category:	II
Degree of pollution:	2
Range of application:	For use only in closed interior rooms

Environmental conditions

Height above mean sea level:	up to 5000 m
Ambient temperature:	5-40 °C
Relative air humidity:	Max. 80 % up to 31 °C, linearly decreasing to 50% at 40 °C, noncondensing
Atmosphere:	Do not use under inert gas atmosphere

Ozone

All high-voltage ionizers produce a trace of ozone. The METTLER TOLEDO ionizer ozone level is considerably below the international safety limit of 0.1 ppm.

7.2 Dimensions

Dimensions in mm.

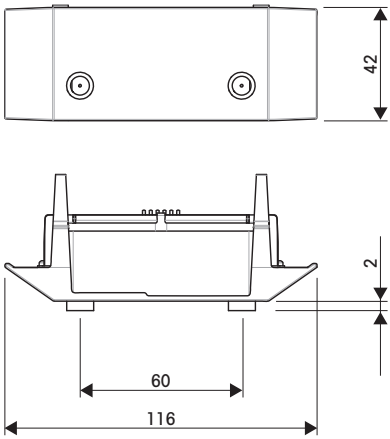

GWP®

Good Weighing Practice™

GWP® is the global weighing standard, ensuring consistent accuracy of weighing processes, applicable to all equipment from any manufacturer
It helps to:

- Choose the appropriate balance or scale
- Calibrate and operate your weighing equipment with security
- Comply with quality and compliance standards in laboratory and manufacturing

www.mt.com/GWP

www.mt.com/lab-accessories

For more information

Mettler-Toledo GmbH
Im Langacher 44
8606 Greifensee, Switzerland
www.mt.com/contact

30419897B en

30419897